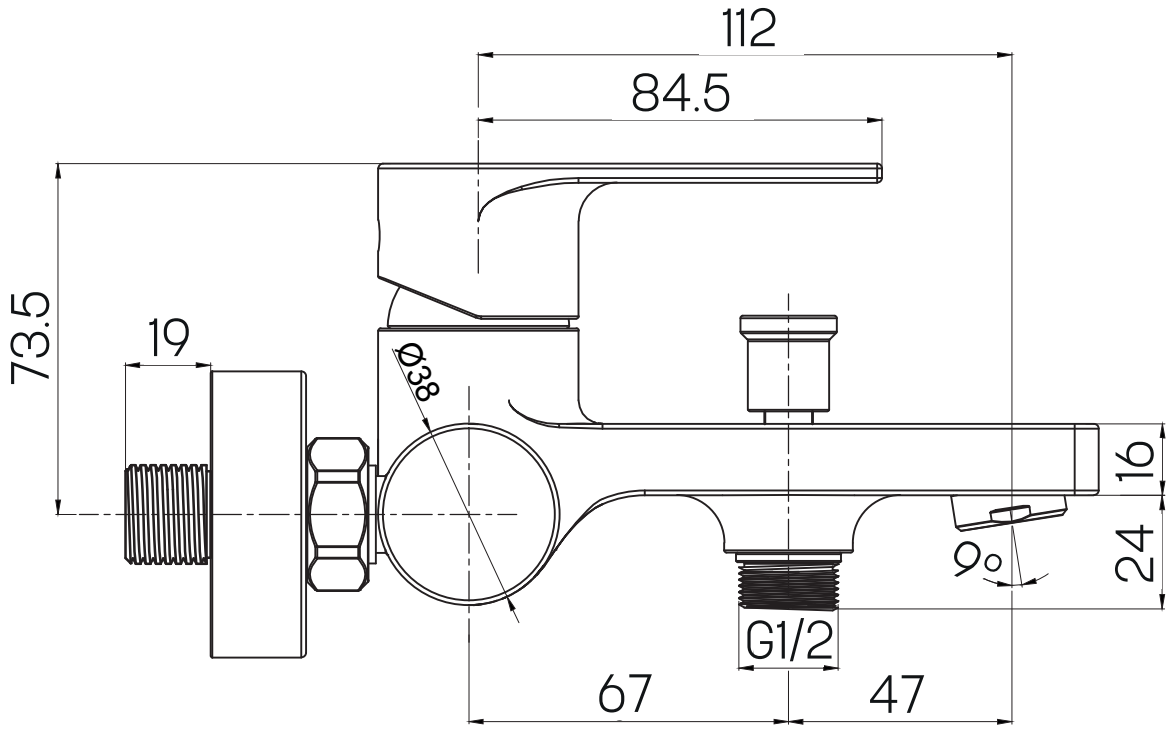
112
84.5
73.5
19
Ø38
16
24
9°
G1/2
67
47

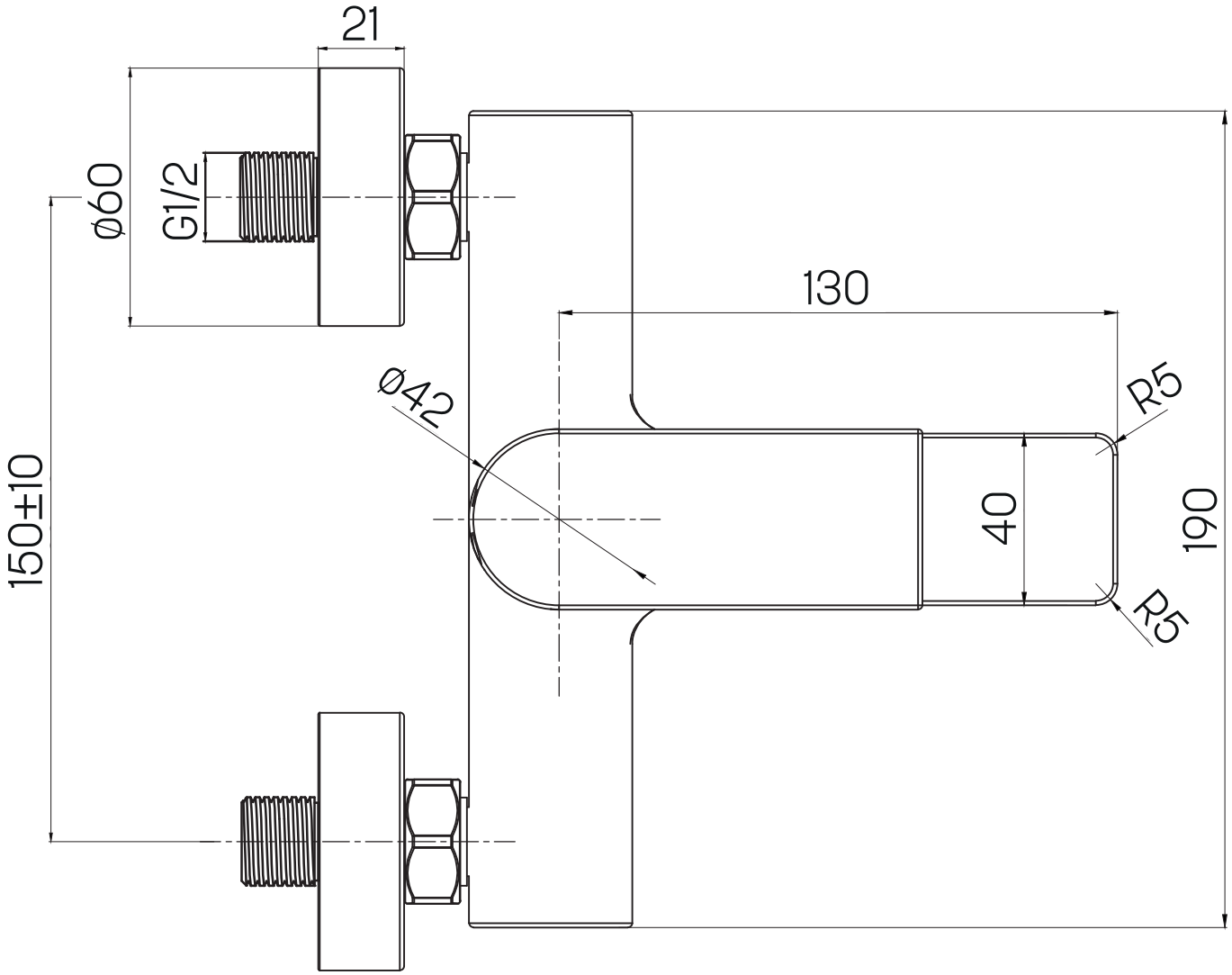
21
Ø60
G1/2
130
Ø42
R5
40
190
150±10
R5