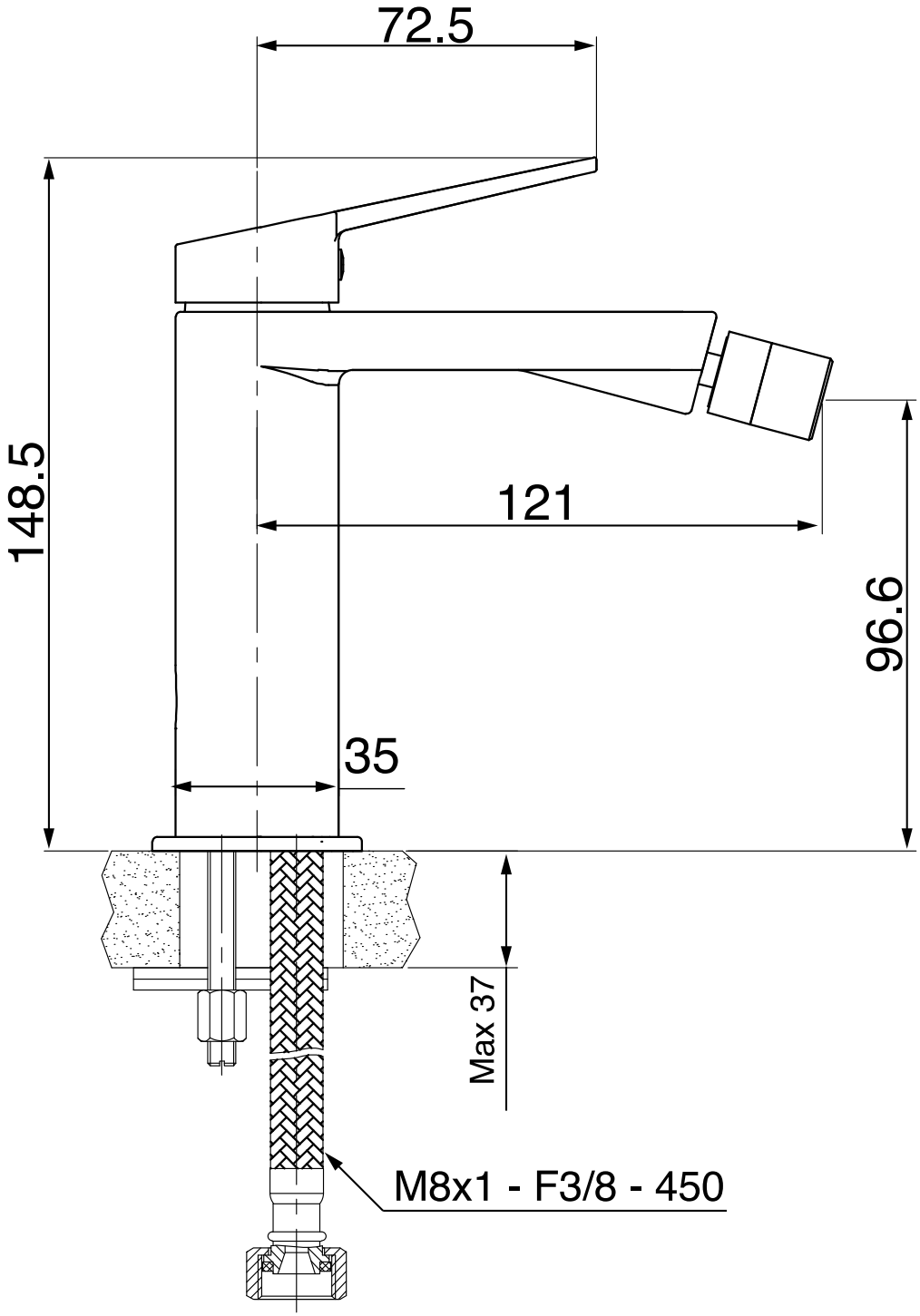
72.5
148.5
121
96.6
35
Max 37
M8x1 - F3/8 - 450