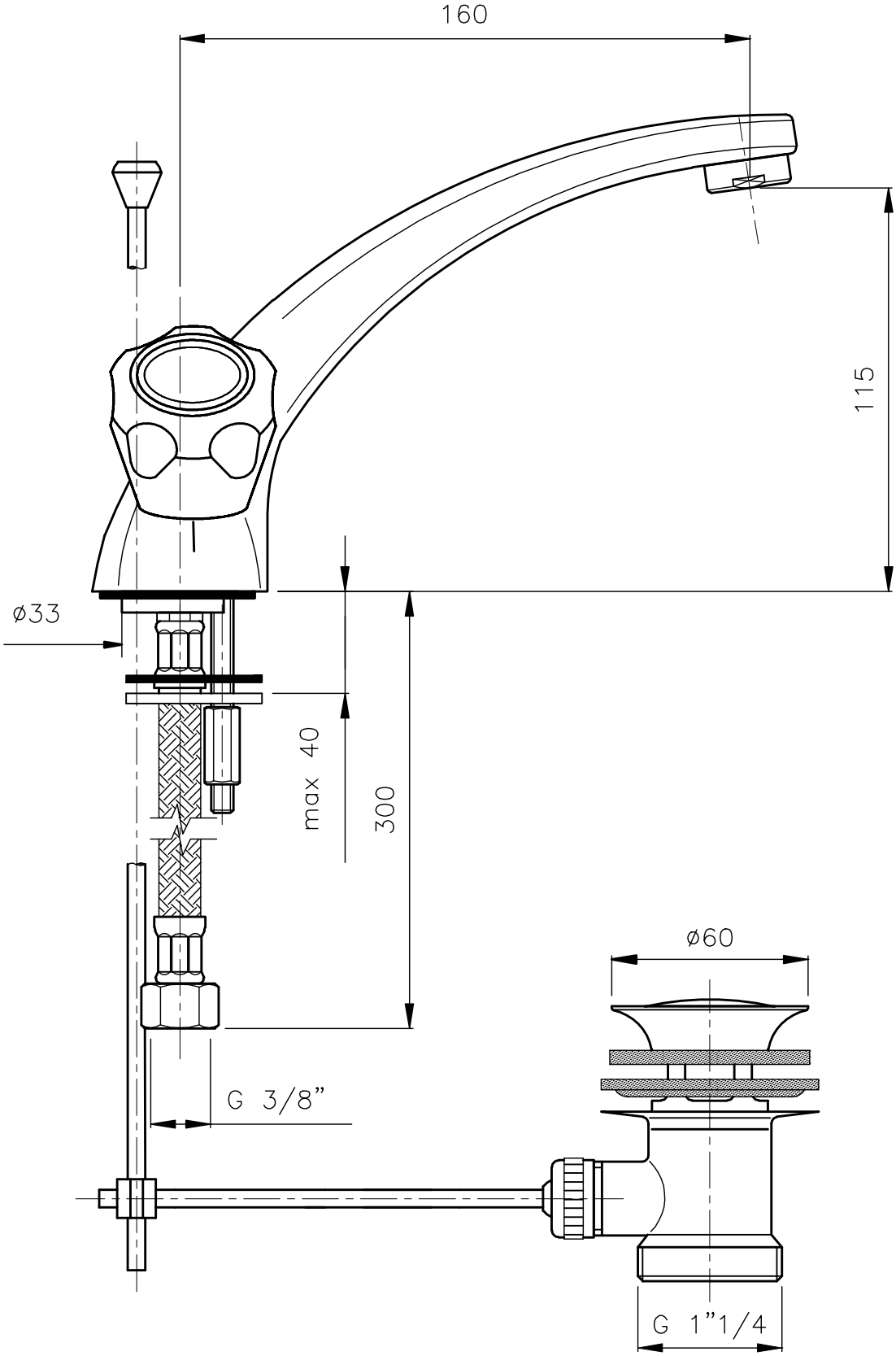
160
115
ø33
max 40
300
ø60
G 3/8"
G 1"1/4